Evolift Flap

Parallel Opening Door, Soft Close

Smoothness and silent movement

Two strength types dependent on door dimensions and weight. Coil-spring movement with a wide range of adjustment. For use on wooden and alu-framed doors.

Technical features

- Two strength types dependent on door dimensions and weight
- Coil-spring movement with a wide range of adjustment
- For use on wooden and alu-framed doors
- Soft close
- Neatly-designed covers in white or titanium colour

EPFOLUOS Pte Ltd
ADD> 7 Jalan Kilang # 01-01 Singapore 159407T> +65 6376 0983 F> +65 6235 0356 W> epfoluos.com M> sales@epfoluos.com

Evolift Flap

Parallel Opening Door, Soft Close

- Technical

EvoLift - Opening systems - Flap door
Assembly instructions

Drilling pattern for wooden door.

Hinges for doors with soft-close and handles **C2_6A99**

Hinges for doors with Push opening
C2_PA99 (Push hinges) for a more decisive opening
C2_4A99 (unsprung hinges) for a softer opening

Available fixing systems for the hinge cup:

A = wood screw fixing, 48x6 mm drilling
P = wood screw fixing, 45x9.5 mm drilling
U = wood screw fixing, 52x5.5 mm drilling
B = dowel fixing, 48x6 mm drilling
R = dowel fixing, 45x9.5 mm drilling
W = dowel fixing, 52x5.5 mm drilling

D = sideways and upper overlay

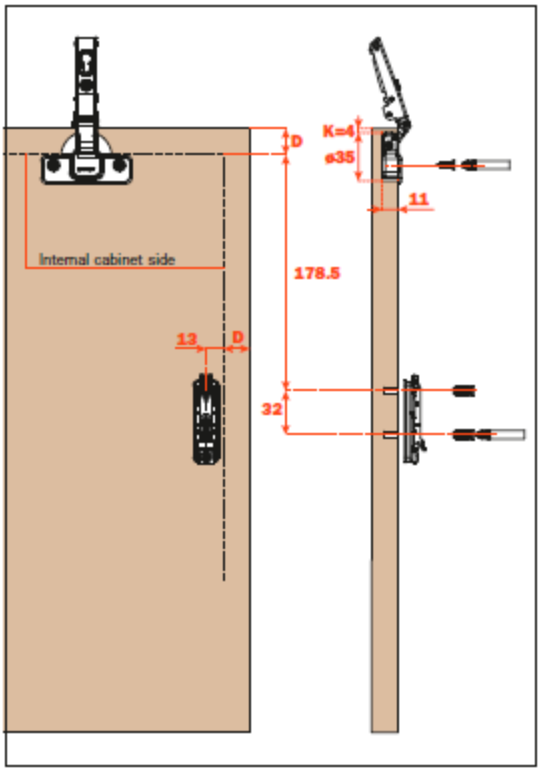

Drilling pattern for alu-framed door
width min. 17 mm max. 24 mm.

For alu-framed door, fix the mounting plate to the appropriate adapter.

Hinges for doors with soft-close and handles
C2_6A99

Hinges for doors with Push opening
C2_PA99 (Push hinges) for a more decisive opening
C2_4A99 (unsprung hinges) for a softer opening

D = sideways and upper overlay

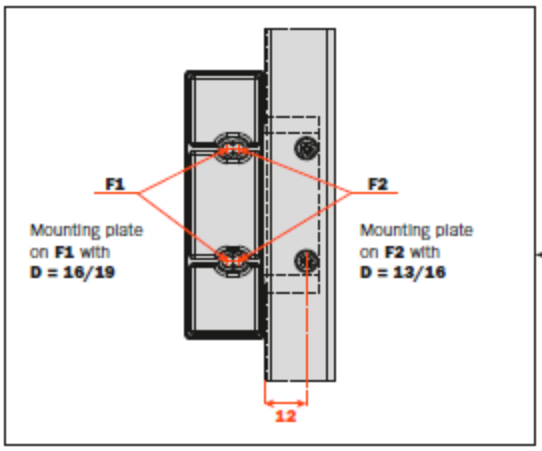

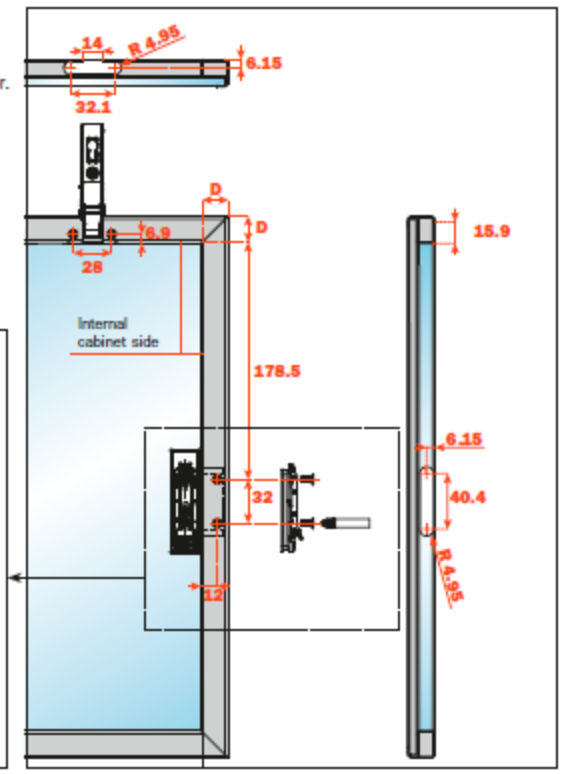

EPFOLUOS Pte Ltd
ADD> 7 Jalan Kilang # 01-01 Singapore 159407T> +65 6376 0983 F> +65 6235 0356 W> epfoluos.com M> sales@epfoluos.com

Evolift Flap

Parallel Opening Door, Soft Close

- Technical

Drilling pattern for alu-framed door width min. 45 mm.

Hinges for doors with soft-close and handles **C2_6A99**

Hinges for doors with Push opening
C2_PA99 (Push hinges) for a more decisive opening
C2_4A99 (unsprung hinges) for a softer opening

Available fixing system for the hinge cup:

A = wood screw fixing, 48x6 mm drilling
P = wood screw fixing, 45x9.5 mm drilling
U = woodscrew fixing, 52x5.5 mm drilling

D = sideways and upper overlay

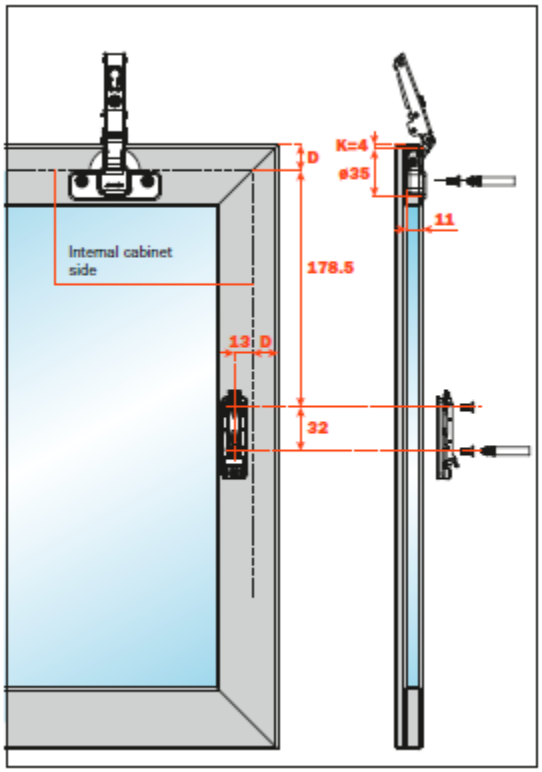

EPFOLUOS Pte Ltd
ADD> 7 Jalan Kilang # 01-01 Singapore 159407T> +65 6376 0983 F> +65 6235 0356 W> epfoluos.com M> sales@epfoluos.com